THE NDT TECHNICIAN

A Quarterly Publication for the NDT Practitioner

TNT Focus: UT Inspection of Material Forms

Material forms commonly inspected by ultrasonic testing include pipe and tubular products, plate and sheet, bar and rod, forgings, castings, composites, welds, bonded structures and special products.

Billets and Slabs

Refined metals are cast into convenient shapes such as billets and slabs for further processing into products such as bars, plates and tubes. These intermediate forms may be processed by hot or cold working, or machining to form the metal into a finished product.

Ultrasonic scanning of pipe weld

Ultrasonic testing is usually performed to determine the location of discontinuities such as cracks, gross porosity, or large inclusions that must be removed before further processing. Various ultrasonic testing techniques can be used to detect these discontinuities.

Immersion testing using large search units may be used for ultrasonic testing of square, round, or rectangular cross sections. Pure immersion may be used for smaller sections, while water jets provide coupling for larger sections. Pulse echo testing is most widely used.

Surfaces of these material forms are frequently very rough and contact testing may be difficult. However, forms too large for immersion testing are often contact tested and may be rough machined before testing to improve the reliability of the test.

In some metals such as nickel-based alloys, coarse grain structures can cause serious attenuation problems and reduce the effectiveness of ultrasonic testing.

Pipes and Tubular Products

Pipes and other tubular products are manufactured by various methods that include extrusion, swaging, drawing, forging and welding. Typical discontinuities in nonwelded tube and pipe are blisters, gouges, seams, laps and scabs. In welded products, discontinuities are usually associated with the weld area and are typically of the weld type, such as cracks, lack of penetration, porosity or inclusions.

Pipes and tubes are normally tested using the shear wave technique. Immersion testing may be used. When the contact technique is used, search units usually have curved shoes/wedges to conform to the pipe or tube surface. The frequency and beam angle used are selected to ensure detection of relevant surface and

A Publication of the American Society for Nondestructive Testing

Volume 2, Number 3 **July 2003**

TNT Focus: UT Inspection of Material Forms 1
TNT Tips: Making Your Own Ultrasonic Calculator 1
Tech Toon 2
FYI: Reference and Calibration Standards 7
TNT Practitioner Profile: Kathy Gunser 8
TNT Inbox 8

TNT Tip: Making Your Own Ultrasonic Calculator

How convenient it would be to have a simple visual tool (calculator) to help identify where your sound is when conducting ultrasonic examination of welds or specimens with complex shapes. Whether your equipment is state of the art incorporating the right angle trigonometry option (assuming both access planes are parallel), or just a "good old unit" that still meets calibration requirements, a simple calculator can be an invaluable tool for the examination of welds and other components.

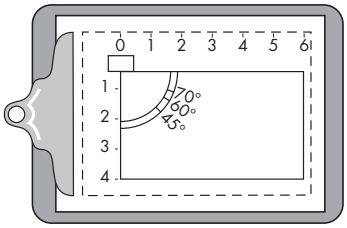

Visual tool for locating sound in UT exams of welds or specimens with complex shape.

Assembly:

- You will need a standard size clipboard to be used as the "base plate".
- A sheet of graph paper (I used quad rule 4 X 4 paper). With permanent marker, label *x* and *y* axes with appropriate scale (i.e., inches or cm). Select a reference point on the top scale (0,0) to coincide with point of incidence of any transducer you may choose to use. From this reference point use a compass, plus protractor, to draw an arc representing degrees and label points (i.e., 45, 60 and 70 degrees).
- Glue graph paper to base plate (I used basic glue stick), leaving at least 0.25 in. (6 mm) exposed border to base plate. Then cover base plate and exposed graph paper with a single clear lamination sheet. Now use water

Tech Toon

"You know, this is a totally different kind of bond test ..."

subsurface discontinuities. Waves are propagated circumferentially and axially as shown in Fig. 1 and should be moved in both axial and circumferential directions.

Reference standards must have a wall thickness and outside diameter that are comparable to the test object. Therefore, it is common to prepare reference standards made from the material to be tested. Usually the artificial reflectors used are notches, with a depth of 5 to 10 percent of the wall thickness. Circumferential and axial notches are often required and should be located away from the ends of the tube and separated by sufficient distance to avoid spurious signals (Fig. 2). Signals from the notches are usually set between 50 and 90 percent of *full screen height* to permit a common threshold for the inspection.

Plate and Sheet

Plate and sheet are usually manufactured by heating a slab and passing it between two rotating mechanical rollers. The rolling process is repeated decreasing the space between the

washable markers to draw the sound path and side orthographic view of the component with dimensions.

- Cut out from a clear stiff plastic stock a piece about 3 in. (75 mm) wide along the length of the stock (I used transparency film). Fold plastic stock at each end so as to wrap around the base plate. I used two rubber bands to hold stock in place. I used this part (I call it the "slider") to draw welds or other geometrical areas of interest to scale. Now, by moving the drawing (weld) along base plate, I can identify dimensions, location, and even classification of flaws with a high degree of confidence.

Not to waste space and to enhance my calculator, I listed general UT equations, acoustic properties of materials, and other handy pertinent information, and then glued this info sheet to the back side of base plate (clipboard) and laminated it. Total cost of materials was less than three dollars and I still use the clipboard as a pad holder for notes. Modifications or improvements are only limited by imagination.

Dan Marks, NDT Engineer
Marks & Associates
Quincy, Illinois

THE NDT TECHNICIAN
A Quarterly Publication for the NDT Practitioner

Volume 2, Number 3 **July 2003**

Publisher: Wayne Holliday
Publications Manager: Paul McIntire

Editor: Hollis Humphries
Technical Editor: Ricky L. Morgan
Review Board: William W. Briody, Bruce G. Crouse, Ed E. Edgerton, Anthony J. Gatti Sr., Jesse M. Granillo, Edward E. Hall, Richard A. Harrison, James W. Houf, Eddy Messmer, Raymond G. Morasse, Ronald T. Nisbet

The NDT Technician: A Quarterly Publication for the NDT Practitioner (ISSN 1537-5919) is published quarterly by the American Society for Nondestructive Testing, Inc. The *TNT* mission is *to provide information valuable to NDT practitioners and a platform for discussion of issues relevant to their profession*.

Copyright © 2003 by the American Society for Nondestructive Testing, Inc. ASNT is not responsible for the authenticity or accuracy of information herein. Published opinions and statements do not necessarily reflect the opinion of ASNT. Products or services that are advertised or mentioned do not carry the endorsement or recommendation of ASNT.

IRRSP, *Level III Study Guide*, *Materials Evaluation*, *NDT Handbook*, *Nondestructive Testing Handbook*, *The NDT Technician* and www.asnt.org are trademarks of The American Society for Nondestructive Testing, Inc. ACCP, ASNT, *Research in Nondestructive Evaluation* and *RNDE* are registered trademarks of the American Society for Nondestructive Testing, Inc.

ASNT exists to create a safer world by promoting the profession and technologies of nondestructive testing.

FROM THE EDITOR:

Information is only as valuable as your ability to access it. Here's how you can put the power of the Internet to work for you.

ASNT has instituted a new service for members. It's called the *ASNT NDT Listserve* and it replaces the old ASNT bulletin board, *ASNTNet*. A listserve is a program that distributes e-mail to those that subscribe—automatically. But, it can do much more. *ASNT NDT Listserve* combines the best features of bulletin boards and e-mail mailing lists. You'll find it as part of the *Members Only* services on the ASNT Web page. Use your member number to log in and then create your personal login for the program. Subscribe to any or all of the conferences (major subject areas). It's possible to visit the bulletin boards directly, receive updates through e-mail only, or do a combination of both. Spend some time and investigate the program and its potential thoroughly. You'll discover a great way to network with other members of your profession.

Questions or comments, contact:

Hollis Humphries, TNT Editor
PO Box 28518, Columbus, Ohio 43228
<tnt@asnt.org>; (800) 222-2768 X206; fax (614) 274-6899

rolls until a desired thickness is obtained. Very thin sheet and foil are almost always cold rolled. Discontinuities usually sought by ultrasonic testing are scabs, seams, cracks and laminations.

Plate may also be made by direct casting, but this is normally done only for metals that tend to break up if rolled. The discussion of castings that follows also applies to cast plate. Rolled plate and sheet are usually ultrasonically inspected using straight beam or angle beam pulse echo techniques. Both contact and immersion techniques can be used. Commonly, the material is tested by scanning from one side across the width or length of a single surface. An array of search units can be used for faster inspection and to ensure full coverage of the object. For critical applications, both straight beam and angle beam tests may be performed to increase the probability of detecting all relevant discontinuities regardless of their orientation and location.

Angle beam testing is much faster when 100 percent coverage is required, but laminations may remain undetected during inspection. Straight beam inspection cannot be performed on thin sheets when the front surface resolution does not allow the separation of the front surface from the back surface. A typical plate reference standard is shown in Fig. 3.

An alternative inspection technique for suitable thicknesses of material uses lamb waves. Its use is not widespread but is sometimes advantageous because full coverage the width of the sheet can be obtained without moving the search unit across the sheet. However, the detected signal requires complex signal processing because different frequency components propagate at different speeds.

Bar and Rod

Bar and rod stock are typically manufactured from billets by forging, drawing, extrusion or rolling. In most cases, the working is done at elevated temperatures. Small bars may be cold drawn from larger bars and processed through a series of progressively smaller sized dies. Discontinuities most often include cracks, laps, seams and bursts and, in large size bars, may also include flakes. Straight beam and angle

Figure 1. Ultrasonic testing scan plan for piping and tubing with axial and circumferential wave propagation.

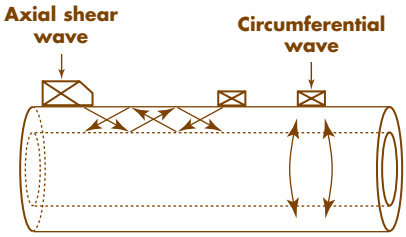

Figure 2. Piping and tubing reference standard with axial and circumferential notches.

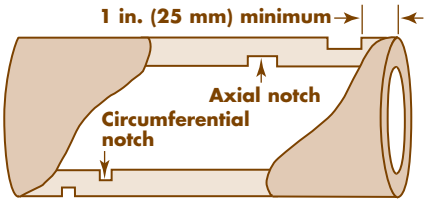

TEST NDT, INC.

"When only the best is good enough"

Schedule of NDT Training Courses for 2003

MT LI /II – July 7 – 9, Sept. 8 – 10, Nov. 10 - 12
PT L I/II – July 10 – 11, Sept. 11 – 12, Nov. 13 - 14
UT L I – Aug. 4 – 8, Nov. 17 - 21
UT L II – Aug. 11 – 15, Dec. 1 - 5
RT L I – July 21 – 25, Oct. 27 – 31
RT L II – July 28 – August 1, Nov. 3 - 7
RT Film Interpretation – October 13 – 17,
Radiation Safety (IRRSP Prep) – Jul. 14 – 18, Oct. 20 - 24
ET L I – Aug. 18 – 22, Dec. 8 - 12
ET L II – Aug. 25 – 29, Dec. 15 - 19
Special Courses – Please call for details
Aircraft Composite & Bonding Inspection, ACFM, TOFD

NDT Level III Refresher Courses
Basic – Sep. 15 - 19
Eddy Current – Oct. 1 - 3
Penetrant – Sep 25 - 26
Magnetic Particle – Sep. 29 - 30
Radiography – Sep. 22 - 24
Ultrasonic – Oct. 6 - 10

"New NAS 410 training requirements. Top-up courses for MT and PT now available"

Please call for details

" Our policy is not to cancel courses"

If payment is received two weeks prior to course

Qualification Examinations – Prepared and administered
Level III Consulting Services by Richard Harrison,
ASNT NDT Level III in UT, RT, ET, MT, PT and VT (Cert # KM 1485)
Contact: Richard Harrison, 193 Viking Ave. Brea, CA 92821
Ph (714) 255-1500 Fax (714) 255-1580 Website: www.testndt.com

Maximize your inspections!

Introducing the **Maxima™ 3500**
— the world's most powerful UV-A lamp!

Reveals even the smallest surface defects!
Latest micro discharge light (MDL) technology enables the Spectroline® Maxima™ 3500 UV lamp to deliver a *steady-state UV-A intensity of 60,000 µW/cm² at 15 inches!*

Features:
- **Instant on/off/restrike switch** — No lamp warm-up required
- **Safe** — Virtually no emission of hazardous UV-B light
- **Super rugged** — Lamp head and handle constructed of special engineering polymer
- **Prefocused bulb** — Ensures optimum performance
- **Ergonomic design** — Not affected by excessive shock and vibration, provides fatigue-free handling
- **Mounting accessories** — Ideal for custom assembly

For more information, call **1-800-274-8888**

Battery-operated and flood versions also available.

SPECTRONICS CORPORATION
Westbury, New York U.S.A.
www.spectroline.com

Figure 3. Plate reference standard: (a) perspective and (b) right side view.

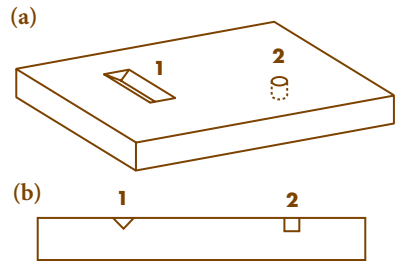

Legend
1 = V-notch for angle beam (shear wave) ultrasonic testing
2 = Flat-bottom hole for straight-beam or longitudinal ultrasonic testing

Figure 4. Bar stock search unit array mounted around circumference of bar stock.

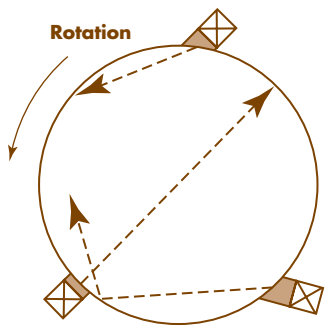

Figure 5. Signal response from dual search units in different positions on casting section: (a) good response and (b) poor response.

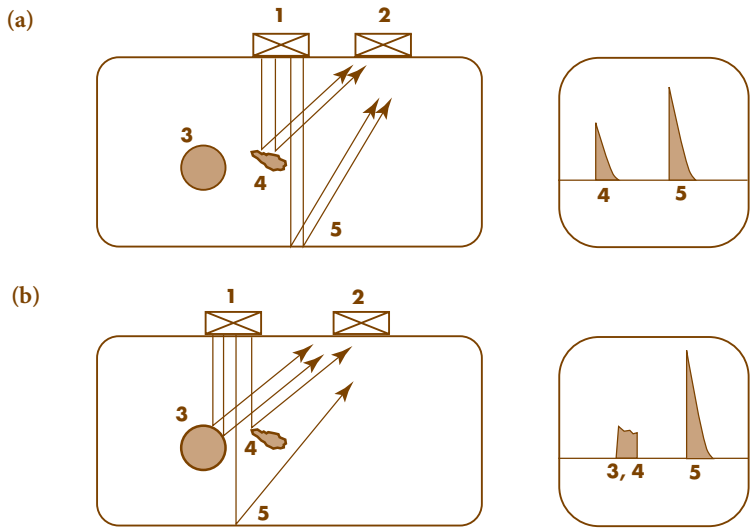

Legend
1 = Transmitter
2 = Receiver
3 = Coring
4 = Discontinuity
5 = Back Reflection

beam pulse echo techniques can be used for inspecting bar stock. Automated immersion systems are often used to reduce the time required for inspections in production environments.

Bars are sometimes tested using a series of search units known as an array. Figure 4 illustrates an array of three different search units mounted around the circumference of the bar stock. The bar is scanned by rotating it in the search units. With such systems, 100 percent coverage is obtained by using:

- surface wave detection for surface discontinuities,
- angle beam detection for near surface discontinuities, and
- normal beam detection for deep seated discontinuities.

Forgings

Forgings are manufactured by hammering or pressing ingots or billets into open or closed dies. It may be done hot or cold, but hot forging is most common. The open die process compresses the material between two flat anvils. The closed die process compresses the metal between contoured dies that surround the finished forging. Discontinuities that may occur include cracks, bursts, flakes and laps.

Forgings are tested with contact or immersion techniques. Both straight beam and angle beam techniques are used, often on the same forging, because the test objects may be quite complex in shape. Because many forgings have rough surfaces and the parts are frequently intended for critical service applications, it is often necessary to machine the test surface to ensure thorough test coverage and maximum sensitivity. For optimum results, the ultrasonic testing beam is generally directed 90 degrees to the direction of the principal metal flow that occurred during the forging process.

Castings

Castings are produced by pouring molten metal into molds with simple or complex shapes. Sand casting is used for large parts with relatively simple shapes that do not require close tolerances or smooth finishes, or that can be readily machined to required tolerances and finishes. Small parts, intricate shapes and those requiring smooth surfaces and fine tolerances are produced by investment casting, shell casting, or permanent mold casting.

Straight beam inspections using contact, bubbler systems or immersion are used to determine wall thickness or to assist foundry personnel in quickly locating hot tears, large shrinks and similar serious discontinuities for process control. In some cases, dual search unit techniques are useful as shown in Fig. 5.

One of the most useful applications of ultrasonic testing for castings is to determine the depth of subsurface discontinuities detected by radiographic testing and that must be removed. This application often saves a great deal of time and money by establishing the depth to grind or chip, and from which side of the casting, in order to ensure the removal of each discontinuity.

Difficulties in testing castings may be caused by the complex shapes that are often encountered and the relatively rough surfaces that are common. Castings of materials whose grain size cannot be refined by heat treatment, such as austenitic steels and nickelbase alloys, may have a very coarse grain structure that can cause severe testing problems. As described earlier, very high attenuation of the beam, coupled with severe ultrasonic noise, may be encountered. This situation requires the use of an ultrasound frequency that does not provide the required test sensitivity.

Typical discontinuities associated with castings include various kinds of shrinkage cavities, cold shuts, hot tears, cracks, gas or blow holes, porosity, inclusions, core shift and unfused chaplets.

Composites

Composites are nonhomogeneous materials usually consisting of layers of different materials bonded together or embedded in a matrix. Composites frequently consist of layers of fiber with the layers of fiber oriented in various directions. This situation causes major changes in ultrasonic properties in different portions of the laminate. Examples of composites that are ultrasonically tested include graphite/epoxy, glass/epoxy and plastic/epoxy. Composites may also include layers of homogeneous materials such as aluminum sheet/glass epoxy.

Discontinuities commonly found in composites include delaminations, voids, porosity and ply gaps. Voids and porosity are caused by outgassing of volatile chemical components that are trapped in the resin during curing. They are typically located adjacent to the fibers in the matrix.

Delaminations can result from improper curing, but most are due to impact damage, hole drilling, or other sources of excess transverse tensile or shear stresses. They can also result from inclusions of foreign material that contaminate layer surfaces during the lay up process. Inclusions may be introduced from the ply carrier film, release paper, or peel plies and may be difficult to resolve due to low reflectivity. Ply gaps are caused by misalignment of composite tapes during lay up and are difficult to detect because they are filled with resin during processing of the composite.

The strength/life of a composite is seriously affected by delaminations or ply gaps in the composite structure. These planar discontinuities can propagate under normal service loads and result in component failure.

Composites are generally tested using a straight beam or through transmission squirter technique at frequencies between 5 and 25 MHz for materials less than 6 mm (0.25 in.). C Scans or digital computer imaging systems are often used for display and recording.

The integrity of the bond in adhesive bonded joints is determined by using commercially available bond testers. These machines use frequencies in the range of 2.25 to 25 MHz. The bond tester functions by transmitting a series of pulses into the material. Adhesive bond discontinuities are detected by comparing the signal amplitude of the ultrasound wave from the test piece to the ultrasound wave of a reference bond integrity standard. It is important that the reference standard resemble the test piece, especially in material composition and bond joint shape.

Reference standards are manufactured in nearly the same way as the test pieces.

Figure 6. Scan plan showing two search unit positions using pulse echo shear wave contact weld technique. Ultrasound beam from unit in position 1 interrogates weld but is not reflected from discontinuity. Discontinuity is detected when unit is moved to position 2.

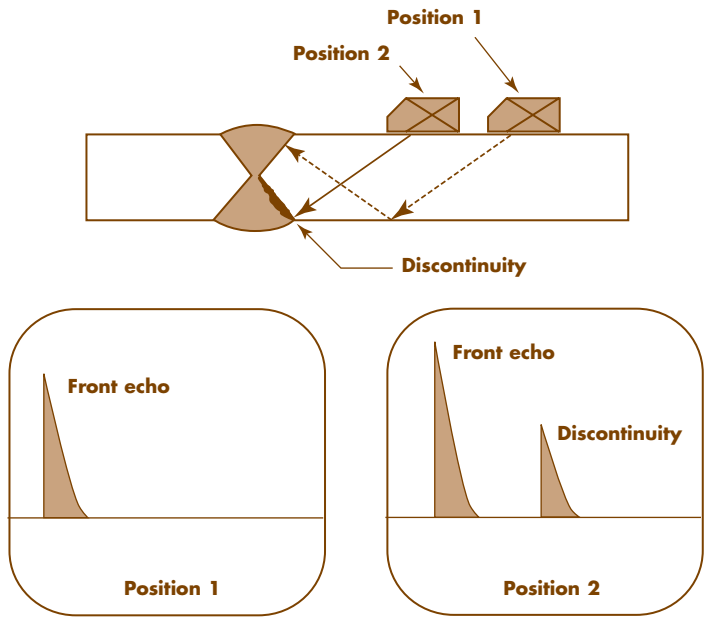

Delaminations and inclusions are simulated by implanting nonmetallic films in the reference standard to simulate the low reflectivity of foreign material discontinuities.

Welds

Welding processes widely used in manufacturing include electron beam, plasma arc, fusion, arc, spot and resistance welding. Wrought and cast products are often joined using welding processes. All welding techniques including automatic processes, are susceptible to discontinuities in the weld and in the adjoining base metal.

Manufacturing difficult assemblies and shapes requires use of a variety of joint configurations. Common joint designs include variations of butt, fillet and lap joints. Many different filler metals are used depending on the metals to be joined and other variables in the process. Common weld discontinuities include hot cracks, cold cracks, porosity, inclusions, incomplete fusion, incomplete penetration, undercut and melt through.

The ultrasonic shear wave contact technique with an A Scan presentation is most often used for detecting weld discontinuities, though immersion may be used for special applications. Generally, 2 to 5 MHz is used for resolution of weld discontinuities. Higher frequencies up to 15 MHz are used on finer grained metals. An exact scan plan is necessary to ensure that all areas of the joint are evaluated. Note for example, in Fig. 6, that the ultrasound beam from the search unit in position 1 is interrogating the weld, but will not be reflected from the discontinuity. When the search unit is moved to position 2, the discontinuity will be detected.

To ensure thorough testing of welded joints, the weld and the adjoining base metal must be searched in both longitudinal and both transverse directions as shown in Fig. 7. In addition, the base metal should be straight beam tested to protect against laminar discontinuities that would interfere with detection by the angle beam searches.

Bonded Structures

Metallic brazing, soldering and adhesive bonding are common types of bonding processes. Brazing and soldering use filler metals heated to temperatures above their melting point. Adhesive bonding uses adhesive (glue) to bond adjoining parts, usually metal sheets as shown in Fig. 8. Typical discontinuities associated with bonding processes include incomplete fill, voids, base metal erosion (brazes only), lack of bond and delamination.

Bonded joints that cannot be usefully evaluated using radiographic testing can often be examined successfully with ultrasonic testing. Straight beam testing with frequencies

Figure 7. Search unit paths for full coverage of ground flush plate weld. Path of search unit is 75 to 80 percent of beam width (20 percent overlap).

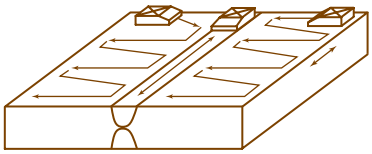

Figure 8. Adhesive bonding uses adhesive to bond adjoining parts, usually metal sheets.

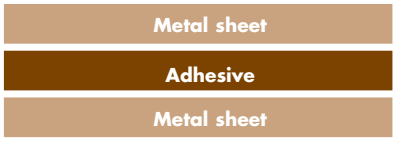

Figure 9. Bond standard using stop off technique: (a) top view and (b) side view.

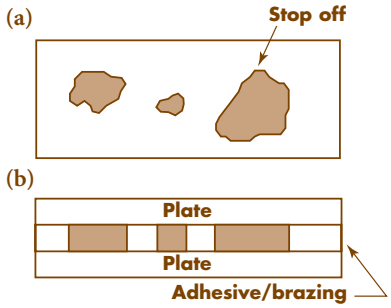

between 5 and 15 MHz usually produces good results in braze inspections. Disbond, voids and porosity can be detected. Ultrasonic testing braze standards often consist of a sample joint with a hole drilled to the interface surface or with a synthetic void made by using stop off tape to prevent entry of the filler material into portions of the joint (Fig. 9).

Special Products

Specialized pulse echo techniques using attenuation and velocity measurements have been used successfully to examine wood, rubber, glass and ceramic materials. Wood, especially particleboard, is examined after hot processing using an array of air coupled search units. The technique uses a frequency of 30 to 40 kHz to detect ply separations and other unfavorable discontinuities.

Rubber products are also tested with air coupled search units. Rubber used for automobile and aircraft applications is tested prior to recapping to ensure a sound substrate.

Ultrasonic testing can resolve discontinuities on the order of 0.1 mm (0.004 in.) in ceramic and glass used in aerospace applications. Frequencies over 50 MHz are commonly used with focused search units. Due to local density variations, microstructure and surface conditions, ceramic and glass materials require specialized techniques and reference standards.

This article has been abstracted from the *ASNT Level II Study Guide: Ultrasonic Testing Method,* second edition by William Spaulding and George C. Wheeler. ASNT study guides are a publication series presenting fundamental information intended to assist candidates preparing for Level II testing examinations administered within the ASNT Central Certification Program (ACCP). Each guide is devoted to a specific method and includes sample questions and answers, recommended reading and resource materials for additional information and an appendix with standard terminology for the method presented. If you would like more information about *ASNT Level II Study Guides*, visit www.asnt.org/shopasnt or call (800) 222-2768 and speak to our Book Department.■

ASNT Membership

JOIN ASNT!

and help create a safer world!

NDT Technicians:

ASNT is the best source for keeping you informed. ASNT membership is a wise investment in your career. Society membership brings you access to the resources needed to excel. Don't Miss out on ASNT's entire package of member benefits. In addition to *The NDT Technician*, ASNT Members enjoy:

- Ability to network with other NDT personnel.
- Discounts on ASNT products and services.
- A full year of ASNT's premiere journal, *Materials Evaluation.*
- Opportunities for career advancement.
- Utilize employment assistance programs.

Become a member today!

Call **614.274.6003 or 800.222.2768** US/Canada

Visit **www.asnt.org** Email **rdheel@asnt.org**

FYI: Reference and Calibration Standards

To ensure accurate and repeatable inspection, ultrasonic testing equipment must be standardized and calibrated so that data taken by different operators are comparable and can be matched against inspection norms. This is accomplished through the use of reference and calibration standards or test blocks.

Selecting a Reference Standard. Selection of a reference standard is determined by testing technique, type of material to be inspected and form, type of discontinuity to be detected, and specification requirements. Reference standards, such as those designed to ASTM, ASME or AWS specifications, are used to standardize equipment responses. Blocks with flat bottom holes (Fig. 1) are often used to standardize amplitude of the detected signal with respect to the effective area or distance of known reflectors. Area (amplitude or distance) amplitude curves are usually constructed using such blocks. In some cases, blocks with side drilled holes are also used for such standardizations. Reference standards varying acoustically from the test object by more than 6 decibels are usually considered unacceptable for use.

Preparing a Reference Standard. Sometimes, it is preferable or required to prepare a reference standard from a piece of the same material as that to be tested, by introducing notches or holes into a sample or into the actual test object. The advantage of such a reference standard is that the test object and the standard will have the same composition, manufacturing history, surface condition and geometry. the disadvantages are that usually there will be fewer artificial reflectors and it may not be possible to manufacture the reflectors as accurately as might be done with a separate standard.

Other types of standard test blocks (and some of the above reference blocks) are used to calibrate the ultrasonic testing equipment with respect to essential variables such as sweep length, pulse energy and amplification, search unit characteristics, sensitivity, resolution and linearity. Typical calibration blocks include IIW type blocks, DC, SC, DSC and MAB blocks. Two uses of the IIW type blocks are shown in Fig. 2a and b.

Conclusion. In all cases, reference standards must be prepared and used in strict accordance with well designed specifications that cover the material, the fabrication and the application of the blocks.■

Figure 1. Reference block diagrams (a) and (b) illustrate flat bottom hole for area and distance amplitude blocks, (c) side drilled, (d) known dimension notch and (e) flat bottom holes in block manufactured from actual part.

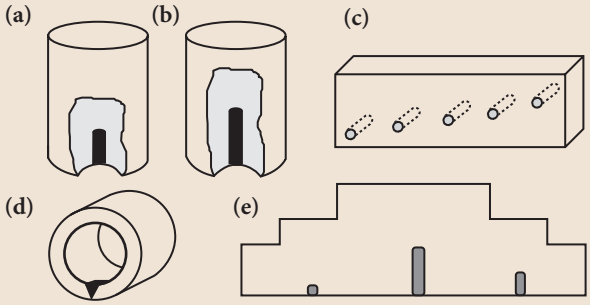

Figure 2. Two uses of the IIW type block include (a) IIW verification of angle beam search unit beam index point and (b) IIW determination of straight beam depth resolution.

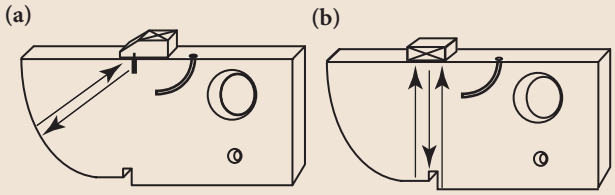

New!

New!

New!

Listserve

The new **ASNT NDT Listserve** combines the best features of e-mail mailing lists (listserves) with bulletin board newsgroups.

Go to www.asnt.org/membersonly first to log in to the Members Only area using your member number. Then create a login for the listserve. After you are logged on, you may participate by visiting the bulletin board, or you may use the listserve's e-mail options.

Each conference (major subject area) has a corresponding mailing list so you may choose to subscribe to one or all conferences.

Networking with the NDT community has just become easier!

Comments ... for *The NDT Technician*?

We'd like to hear them.

TNT's mission is to provide the NDT practitioner with valuable content on issues relevant to the NDT profession. We've implemented an online *Reader Response Form* that allows you to submit suggestions and comments. Visit the ASNT home page at <www.asnt.org>. Follow the Publications link to *The NDT Technician* and click the *online form* link. While you are visiting the *TNT* home page, click the link for the *TNT Feedback Archive*. Read subscriber comments in full text.

TNT Practitioner Profile: Kathy Gunser

Though women are becoming less and less of a rarity in NDT, it is still not typical to find them in the field in day-to-day application. Kathy Gunser began her career in NDT as an offshoot of work she did in documenting NDT practice for her employer.

How did you become involved in nondestructive testing?

I'm from a town of 40,000 in Michigan with limited potential for jobs. Bechtel built a new plant. I went to work for them and worked there for eleven years. I started by doing documentation control which was good because I learned all aspects of all the jobs — civil, electrical and mechanical. And welding inspection and weld procedures. Eventually, the guys were coming to me with questions. "I don't know what WP means? Is it a work point? Is it a weld point?" AWS came onsite and I took and passed the courses. So that's how I got started. I was checking cad welds, bolting, grouting and concrete — rebar, stuff like that. I went into quality control because I knew I could move around and learn a lot. Essentially, I watched and documented NDT being done at Bechtel but I actually began to do it myself when I went to work for Lucius Pitkin.

What methods do you work in?

Dye penetrant, mag particle, some UT, eddy current.

Are there other women working in NDT in your company?

There is one woman engineer. I'm the only female tech.

Can you tell us about some of the NDT you've done and where you've worked?

I worked on a big job for a New York based railroad. I did mag particle on the trucks for all the passenger trains. Trucks are the platforms that wheels are attached to. They're dropped from the car and cleaned and then we inspect them with mag particle and classify them — passed, minor discrepancies, or rejects that are out of the fleet. That was a four and a half year stint.

What kind of indications did you find?

Cracks in the frames of the trucks. We've also inspected condensers and chillers for commercial air conditioning units all over Manhattan. During the winter time we usually go to two shifts with eddy current while the air conditioning is shut down. We have to work two shifts to get it done by April when they want to be back online. We use an oscilloscope calibrated for the type of material being used in the tubing. Copper, copper-nickel, titanium — you calibrate for the particular material.

Is accessing the equipment difficult?

It is usually pretty well set up with scaffolding. I don't have a problem with height. I've done deflection testing on exterior panels from window washing scaffolding sixty-two stories up. We were testing the exterior panels welded into a hidden frame on the skin of the building. A couple panels flew off right after the building was built and there was concern that would reoccur. We tested to see no welds had cracked or were loose. The test was made with suction cups similar to those used to move glass but with a deflection gage attached.

What project has been most interesting?

Well, I've done forensic testing when forty-eight floors of building scaffolding collapsed at 4 Times Square. We did visual testing and comparison checks of the construction drawings against the components of the collapsed scaffolding to see if it had been built according to plan.

What advice would you offer to someone considering NDT as a career?

Varied experience and training is important. Learn all aspects of all the jobs. A lot of the jobs are combinations of everything. Study for your certs. It takes sticking-to-it.

What do you think about third party certification? ASNT has a new program — ACCP. Level IIs and IIIs are being allowed to transition into it for just this year. It's not through the employer so it's portable certification.

I've wondered why there wasn't something like that. Whenever I transferred from one nuclear plant to the other, I had to start all over. I was working for the same company, doing the same job but just doing it at another location.

What's the worst part of NDT?

Oh — boilers are tough. They are so dirty. And deaerators because they are so hard to move in. Once you're in, it's okay.

What's the best part of NDT?

Every job is different. NDT rolls into and adds to whatever you are doing. And, you get to interface with a lot of different entities. You travel. You're in Germany and you're in Mexico and you're in the utilities industry or in the railroads. It's not just one thing.■

TNT Inbox:

Q: What questions should I ask a potential customer when they call in requesting NDT services, or before I go out to a jobsite?

A: Good question. Since many requests for inspection work come through the customer's purchasing department, you are often dealing with someone unfamiliar with NDT just ordering a service. Because of this, you need to know the following things and may have to talk to someone with technical knowledge of the parts to be inspected Here are some questions you may want to ask:

- What exactly is the part (test piece) to be inspected? (Ask for the type, number of parts, dimensions, etc.)
- What material is the part made of? (Material may determine test method, as you can't MT aluminum.)
- What is part thickness? (This affects transducer selection in UT.)
- Where is the inspection to be done and is it accessible? (Will you need a ladder, safety harness, respirator, etc.?)
- Are the parts at ambient or elevated temperatures? (This will affect UT, wet MT & PT, and may affect RT).
- What specification are the parts to be inspected to? (Spec requirements may call for specific equipment.)
- If welds, what welding process was used to make the weld? (This is important for RT, as it limits defect types, and some welds, such as nickel filler metal on cast iron, can cause major magnetic anomalies.)

Answers to these questions will help prepare you for the jobsite and may prevent an extra trip for additional equipment.

E-mail, fax or phone questions for the TNT Inbox to the Editor:
tnt@asnt.org
(614) 274-6899 fax
(800) 222-2768 X 206